vigíarescue

Módulo de comunicación HG2

Introduction

Ikusnet HG2 module (ordering reference IK-4Gx8-HG2) is a communication module and enables Ikusnet BP and ENG for the 3G/4G service.

This device might be ordered for EU & worldwide service or specific for US or China cellular networks.

Specification

The communication module support up to eight LTE (FDD) / DC-HSPA+ /HSPA+ /HSPA /UMTS.

Up to eight standard sized SIM card might be allocated on the SIM card holder inside the module for Ikusnet use.

Supported worldwide LTE bands are B1, B2, B3, B4, B7, B8, B20

Supported worldwide 3G bands are 850, 900, 1900, 2100 MHz

Included inside are eight high gain antennas specified for RF ranges 698..960MHz and 1710..2700MHz. Efficiency at peak gain of 3dBi is rated with 70%.

Glass fiber enclosure; white color.

Size: Hx

Weight: 1.590g

Operational environment temperature: -25ºC to +50ºC ambient (or +42ºC ambient with direct sunlight)

For outdoor (IP63 /IEC60529 protection) and indoor use.

Cable extender for 5m is available (references IK-5M-HG2).

Bottom side picture with indication of the three fixing holes M6. Middle hole is at the center; distance between holes are 35+/-1mm

SIM card allocation; standard size SIM cards. Dust and weather proof cover removed from the SIM card slot.

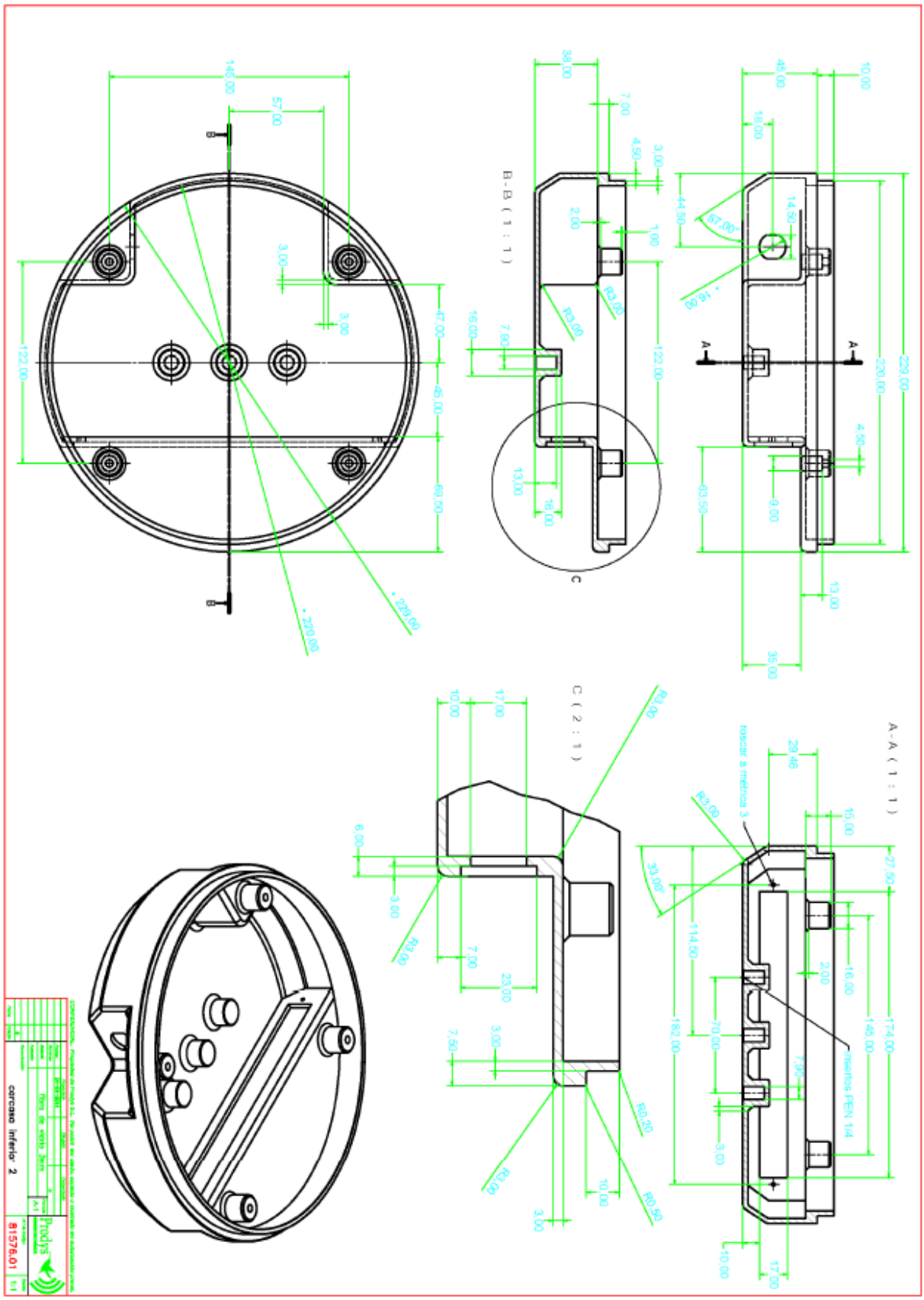
B - B (1 : 1)
C (2 : 1)
A - A (1 : 1)
roscar a métrica 3
insertos PEN 1/4
carcasa inferior 2
81576.01
Prodys

vigíarescue

cartronicgroup

Avda. Fuente Nueva, 12. 28703 San Sebastián de los Reyes - Madrid - España
Tel.: +34 916588760. Fax: +34 916588769
E-mail: marketing@cartronic.es
www.grupocartronic.com
www.linkedin.com/company/cartronic-group